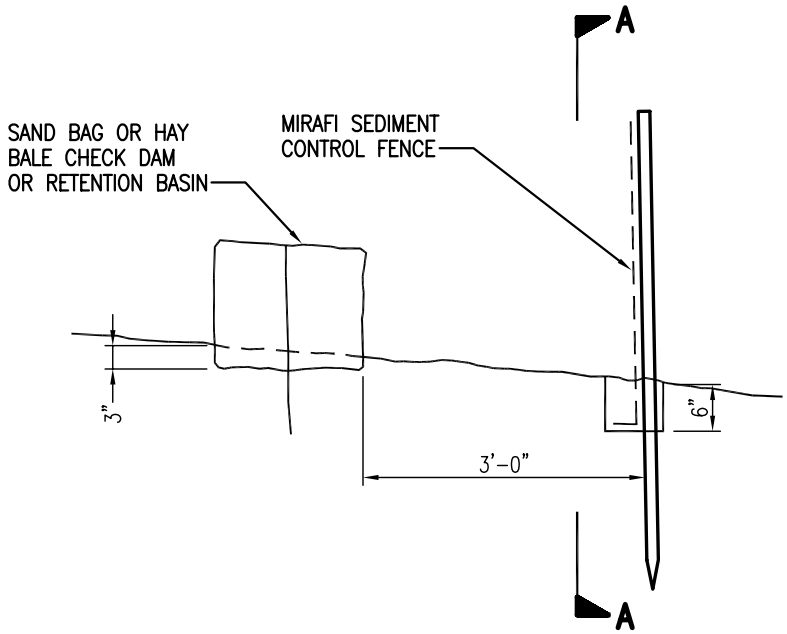

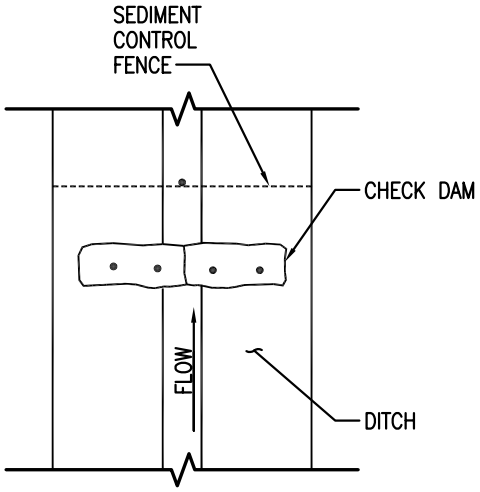

TYPICAL APPLICATION
(AT CHECK DAM)

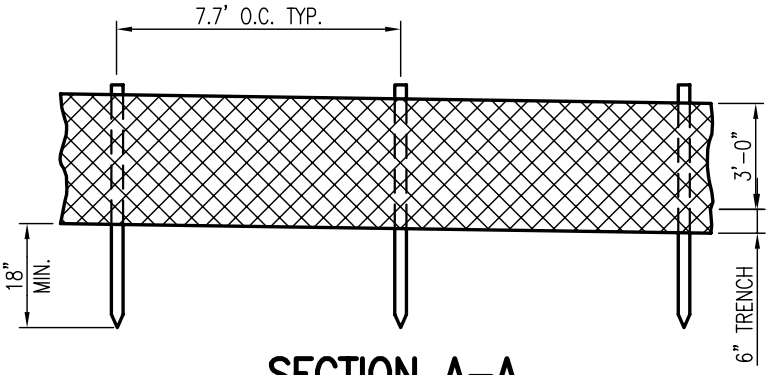

SECTION A-A
SEDIMENT CONTROL FENCE

FIGURE 15
TYPICAL SILT FENCE EROSION
CONTROL BARRIER
NORTHEAST RELIABILITY
INTERCONNECT PROJECT

Bangor Hydro
ELECTRIC COMPANY